θ			
θ			

Ω,

						mΩ

						Ω

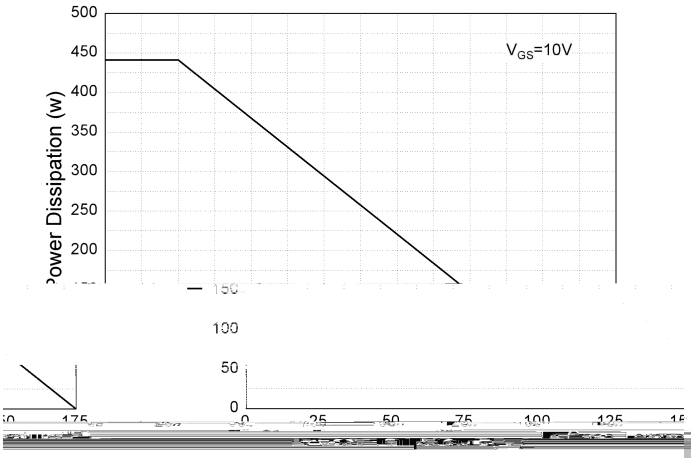
Power Dissipation (w)
VGS=10V
500
450
400
350
300
250
200
150
100
50
0

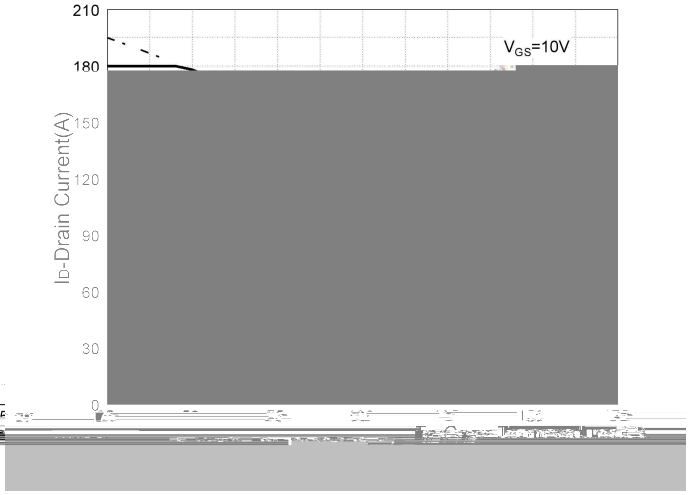
ID-Drain Current(A)
VGS=10V
210
180
150
120
90
60
30
0

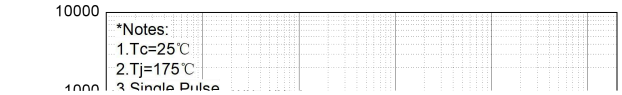
10000
*Notes:
1.Tc=25℃
2.Tj=175℃
3.Single Pulse

10

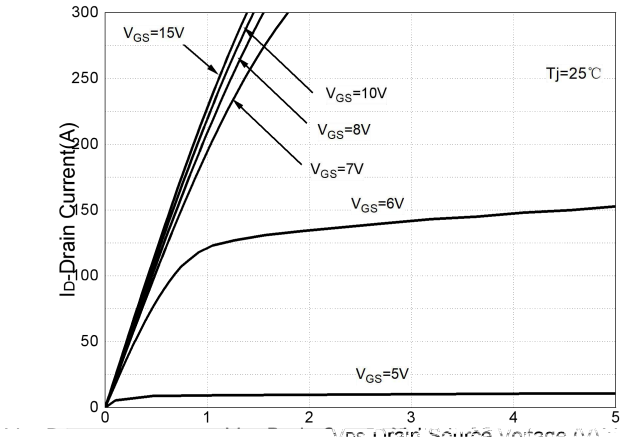
ID-Drain Current(A)
VGS=15V
VGS=10V
VGS=8V
VGS=7V
VGS=6V
VGS=5V
Tj=25℃
300
250
200
150
100
50
0
0
1
2
3
4
5

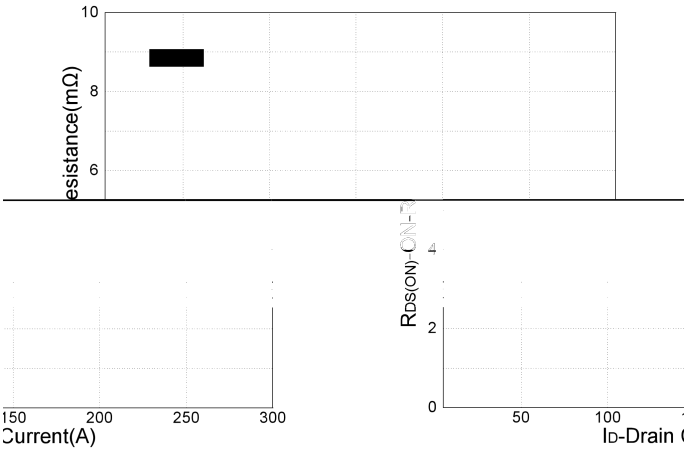
esistance(mΩ)
10
8
6
4
2
0
150
200
250
300
Current(A)
50
100
ID-Drain

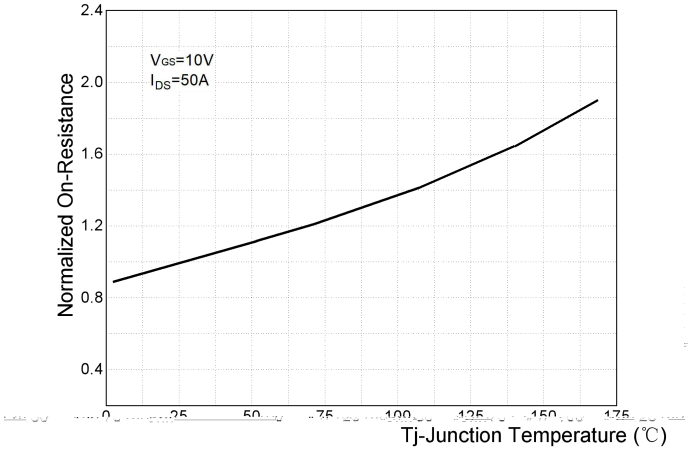
Normalized On-Resistance
2.4
2.0
1.6
1.2
0.8
0.4
VGS=10V
IDS=50A
Tj-Junction Temperature (℃)

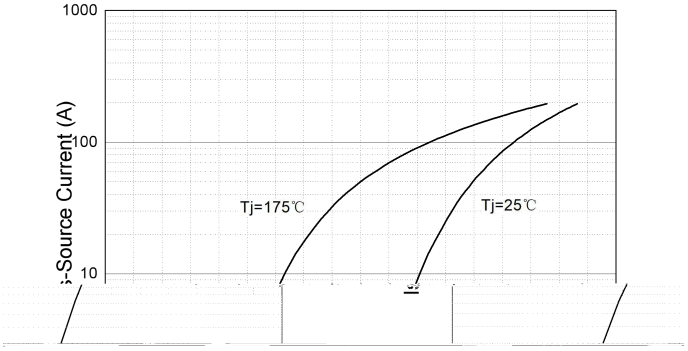
1000
100
10
Tj=175℃
Tj=25℃

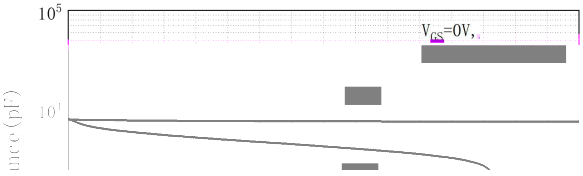
VGS=0V,

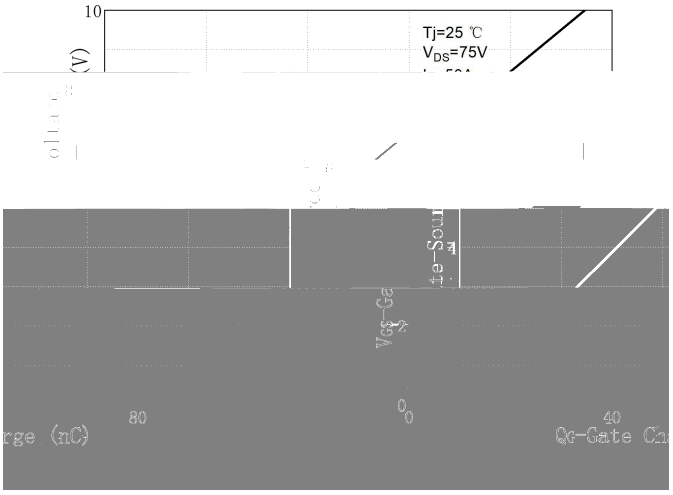
10
Tj=25 ℃
VDS=75V

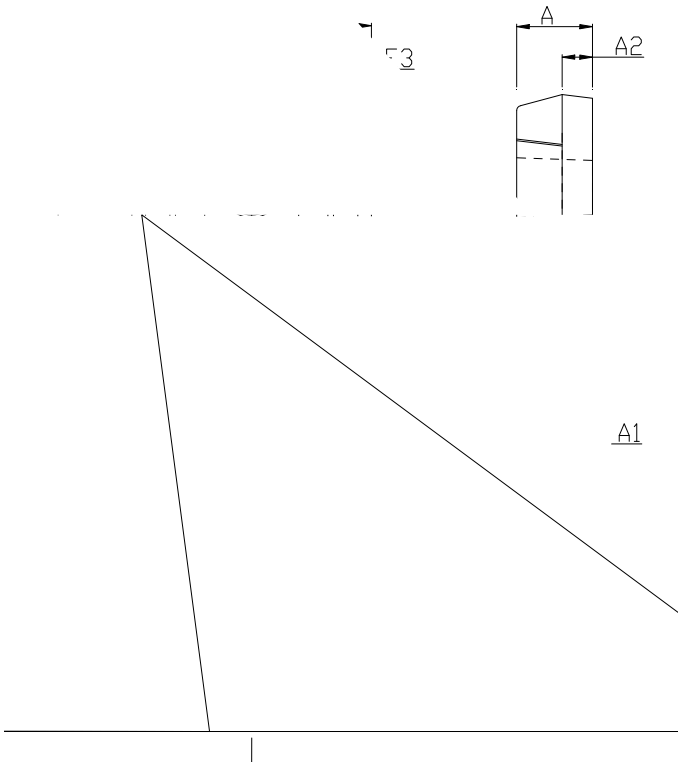
A
A2
3
A1